Worldwide Media Pvt. Ltd.

THE TIMES GROUP

MILACRON®

Presents

ET NOW POLYMERS 10th EDITION Global Conference on Plastics in Automotive

26th November 2026

Novotel, Viman Nagar, Pune



30 YEARS
OF MILACRON INDIA
GROWING TOGETHER
THEN, NOW AND ALWAYS

MILACRON

EVERY AUTOMOTIVE PART.
ONE PARTNER.

From complex under-the-hood parts to robust exterior components, every automotive part can be molded on Milacron's widest range of injection molding machines. Every machine delivers high precision for the polymers vehicles depend on: Filled PP, PA66, PBT, PC, PPS, and flame-retardant PC-ABS in unfilled and filled grades. Built in India on global technology and proven on Indian shop floors, Milacron machines deliver maximum productivity and a lower cost per part, backed by a service team that is never far from your line.



M·POWERED

Predictive Analytics
Alert Monitoring
Remote Diagnostics
Recipe Management



Unrivaled Features

+ Superior Energy Efficiency
+ User-Friendly Controller
+ Maximum Mold Weight Capacity
+ Best-in-Class Dry Cycle Time
+ Shot Weight Consistency
+ ANSI-Certified Safety Features
+ High-Reliability Fanuc Motors & Drives
+ M-Powered Enabled
+ Project Execution Capabilities

Scan to learn more

GET IN TOUCH
enquiry@milacron.com
www.milacron.com

ET POLYMERS 10th Edition Global Conference on Plastics in Automotive

26th NOVEMBER 2026 | NOVOTEL, VIMAN NAGAR, PUNE

09:30 AM – 10:30 AM	Registration & Networking
10:30 AM – 10:35 AM	Introduction By Emcee
10:35 AM – 10:40 AM	Lamp Lighting Ceremony
10:45 AM – 10:55 AM	Opening Address: **Amit Shanbaug,** *Editor, ET Now Machinist and ET Now Polymers*
10:55 AM – 11:10 AM	Welcome Address: **Suraj Thodimarath,** *Managing Director, Milacron India*
11:10 AM – 11:30 AM	Keynote Address: **Prakash Javadekar,** *Former Union Minister for Heavy Industries and Public Enterprises*
11:30 AM – 11:45 AM	Hall of Fame Felicitation
11:45 Noon – 12:05 PM	Industry Insights: Molding the Lighter, Smarter, & Greener Vehicle **Hemal Bhavsar,** *Associate Director – Product Management, Milacron India*
12:05 PM – 1:00 PM	Leadership Panel: **Smart Materials, Sustainable Mobility: The Future of Automotive Plastics in India**
1:00 PM – 1:15 PM	Industry Insights: **The Material Effect – SMART Ways for Sustainable Mobility** **Divakar Gokhale,** *Head of Mobility, Indian Sub-continent, Head of Business Development, Indian Sub-continent, Covestro India*
1:30 PM – 2:15 PM	Networking Lunch
2:20 PM – 2:40 PM	Industry Insights: **Dark Factory for Auto part Molding & PUR coating** **Ramesh Varadan,** *Managing Director, Yizumi Advanced processing Technology Pvt Ltd*
2:45 PM – 3:05 PM	Industry Insights: **Driving Change with Smarter & Sustainable Materials** **Santosh Rathod,** *Country Head & Managing Director, Trinseo India*
3:10 PM – 4:10 PM	Panel Discussion 2: **Material Innovation in Practice — Balancing Performance, Cost and Sustainability**
4:15 PM – 4:35 PM	Industry Insights: **Lionel Vaz,** *Business Director - PLEXIGLAS Molding Compounds and Acrylic Products & General Manager India Region, Röhm*
4:35 PM – 4:50 PM	Industry Insights: **Corrugated EV Tubing For Safety and Superior Performance** **Jai Sanghavi,** *Director, ITIB MACHINERY INDIA PVT LTD*
4:55 PM – 5:55 PM	Panel Discussion 3: **Driving the Next Generation of Automotive Sustainability by Innovation & Collaboration**
6:00 PM	Lucky Draw Contest & Closing Note
6:15 PM Onwards	Networking & High Tea

PANEL DISCUSSION

Leadership Panel: Smart Materials, Sustainable Mobility: The Future of Automotive Plastics in India

Moderator: **Sachin Kadam,** *GBS Director Faurecia Interior Systems Business Group, Faurecia*

- **Sandeep Chaudhary,** *President Region India and MD/ Board Member, Huf India Pvt. Ltd.*
- **Divakar Gokhale,** *Head of Mobility, Indian Sub-continent, Head of Business Development, Indian Sub-continent, Covestro India*
- **Dr. Uday Narang,** *Founder and Chairman, Omega Seiki Mobility and Anglian Omega Group*
- **Dr. Sandeep Waykole,** *CEO, Accolade Electronics Private Limited*

PANEL DISCUSSION

Material Innovation in Practice — Balancing Performance, Cost and Sustainability

Moderator: **Dr. Sandeep Waykole,** *CEO, Accolade Electronics Private Limited*

- **Santosh Rathod,** *Country Head & Managing Director, Trinseo India*
- **Shweta Kulkarni,** *AGM - Materials Expertise Ecodesign & Sustainability, Stellantis India*
- **Ramesh Varadan,** *Managing Director, Yizumi Advanced processing Technology Pvt Ltd*
- **Mohan DK,** *General Manager-Quality, PD, IE Assy and Automation, Toyoda Gosei South India Pvt Ltd*
- **Anil George,** *Co-founder / Managing Director, AutoDynamics*

Our Materials Enable Designers to Bring Their Vision to Life

From the first sketch to the finished product – Covestro materials empower you to build what you envision.



Sensors & Connectivity

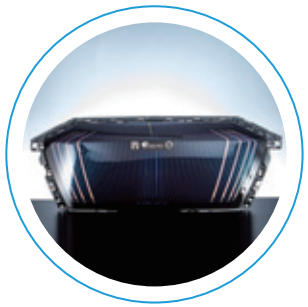

EV Front Panel



HUD & Displays

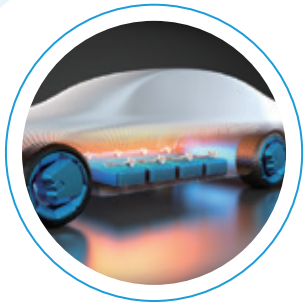

Electrification



Scan to explore Covestro Mobility Solutions

PANEL DISCUSSION

Driving the Next Generation of Automotive Sustainability by Innovation & Collaboration

Moderator: **Divakar Gokhale,** *Head of Mobility, Indian Sub-continent, Head of Business Development, Indian Sub-continent, Covestro India*

- **Hardik M Patel,** *Engineering Director – India Production, Milacron*
- **Dr Prafulla Shinde,** *Regional Sales & NBD, ADTS Leader, LyondellBasell*
- **PC Jayan,** *BU Unit Head, Tata Auto Comp*
- **Gajanan Bhoite,** *Platform Purchase Head – Commercial Vehicle Platform, Mahindra & Mahindra Ltd*
- **Rajiv Sanghvi,** *Managing Director, ITIB MACHINERY INDIA PVT LTD*

YIZUMI | HPM

Silver Partner

PLASTIVISION INDIA | 21 to 25 JAN 2027
INTERNATIONAL PLASTICS EXHIBITION & CONFERENCE

Hall No. 4

Advanced Molding Equipment



SKIII Series
General-Purpose Injection Molding Machine
- The most cost-effective machine
- Low-energy consumption
- Short dry cycle time, high efficiency

Three-platen | Hydraulic | 50-1000T



A6 Series - AI
Advanced and Intelligent Injection Molding Machine
- Intelligent clamping force management system
- Standard feature of KEBA controller for all models
- Intelligent energy consumption management system
- Intelligent weight V/P control

Three-platen | Hydraulic | 90-1000T



D1S Series
Powerful Two-platen Injection Molding Machine
- Compact design with small footprint
- Shorter dry cycle, high efficiency
- Servo system control, energy-saving
- For large and demanding parts

Two-platen | Hydraulic | 500-4000T



FF Series
Fully-Electric Injection Molding Machine
- Low power consumption
- Clean production
- Easy integration of automation
- Ideal for packaging and medical products

Tie bar free | Fully-electric | 15-1380T



VM Series
Vertical Plastic Injection Molding Machine
- Direct clamping + High-rigidity platen
- High precision turntable
- Vertical injection with a reliable injection unit

Vertical machine | Direct clamping | V3, V4 Series

Yizumi Advanced Processing Technology Pvt. Ltd
Address: Plot No.1062-1063, GIDC-II, Sanand, Ahmedabad, Gujarat - 382170.
+91-90999 06175 info.ind@yizumi.com www.yizumi.com

YouTube YIZUMI_Official | YIZUMI_Official



Shri PRAKASH JAVADEKAR

FORMER UNION MINISTER FOR ENVIRONMENT, FOREST AND CLIMATE CHANGE

Shri Prakash Javadekar is a senior political leader of the Bharatiya Janata Party (BJP) with over 55 years of experience in public life. He has served as a Member of Parliament in the Rajya Sabha for 16 years and was a member of the Maharashtra Legislative Council from 1990 to 2002. During his tenure in the Union Government, he held several key ministerial portfolios, including Environment, Forest and Climate Change; Information and Broadcasting; Education (formerly HRD); and Heavy Industries and Public Enterprises.

His administrative experience also includes serving as the Executive President of the Maharashtra State Planning Board from 1996 to 1999 under the BJP-Shiv Sena government. He chaired the Maharashtra Government's IT Task Force and the Government of India's Working Group on IT for Masses (2000–2001). A prominent BJP spokesperson for several years, Shri Javadekar has been a familiar face in public and political discourse, with extensive experience in media engagement, public communication, governance and policymaking.

your reliable partner



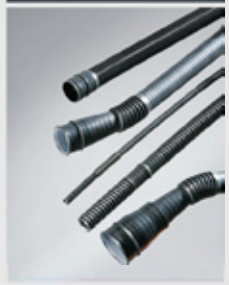

ITIB Machinery International with more than 65 years experience can supply a wide range of extrusion lines for the production of single and double wall corrugated pipes in PE, PP, PVC and other thermoplastic materials starting from 4.5mm I.D. up to 800 mm O.D.
Our new joint venture ITIB Machinery India will offer Single Wall Corrugators from 4.5mm I.D. upto 75 mm O.D. and Double Wall Corrugators from 40mm O.D. Upto 75mm O.D.

www.itibindia.com

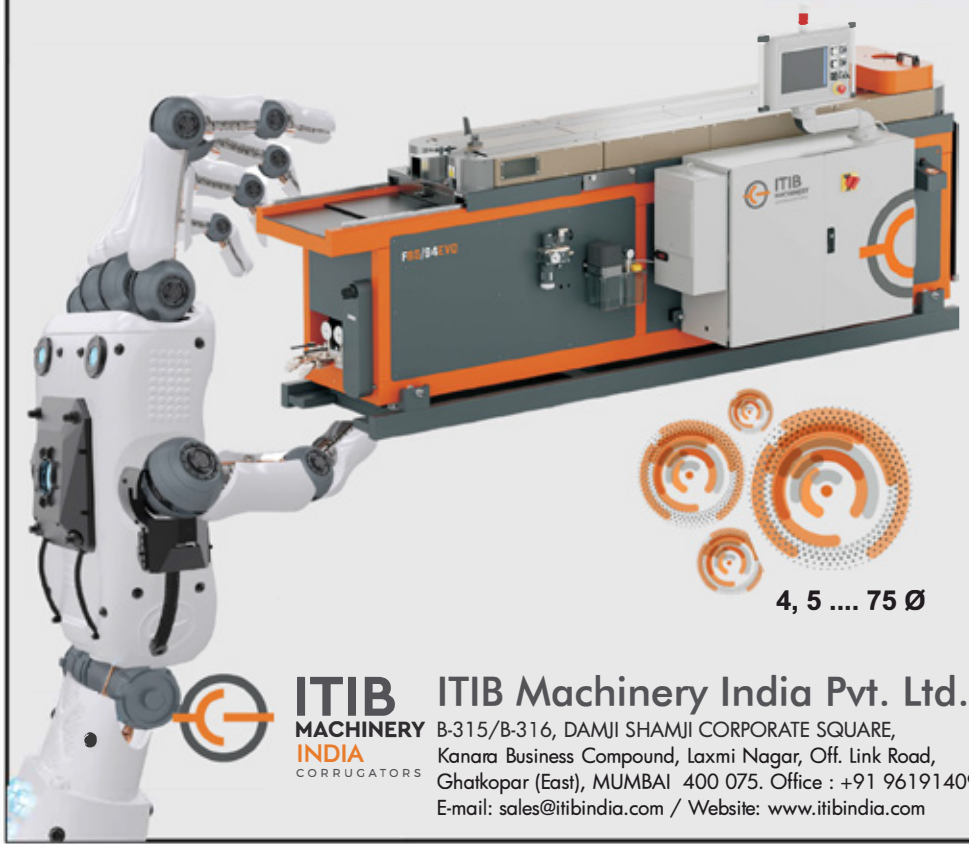

4, 5 .... 75 Ø

ITIB MACHINERY INDIA CORRUGATORS

ITIB Machinery India Pvt. Ltd.
B-315/B-316, DAMJI SHAMJI CORPORATE SQUARE,
Kanara Business Compound, Laxmi Nagar, Off. Link Road,
Ghatkopar (East), MUMBAI 400 075. Office : +91 9619140918
E-mail: sales@itibindia.com / Website: www.itibindia.com



SURAJ THODIMARATH

MANAGING DIRECTOR, MILACRON INDIA

Mr. Suraj Thodimarath is Managing Director of Milacron India, where he leads the company's business across India and international markets. With more than 30+ years of experience in diverse manufacturing industries like elevators, oil & gas, automotive, material sciences, and ATMs. During this journey, he has progressed across the full value chain, from after-sales service and sales through supply chain, manufacturing, engineering, and projects to business leadership. Before joining Milacron, he served as Managing Director, Asia Pacific, at Wittur Group, following leadership roles at Danaher, 3M, and NCR.

Mr. Suraj holds a Bachelor of Engineering in Mechanical Engineering from Tamil Nadu College of Engineering. His executive education includes lean manufacturing from the University of Michigan, core Business Management from Harvard Business School, and AI Governance from the National University of Singapore.

Mr. Suraj believes sustainable mobility is no longer an aspiration but a business imperative for India's automotive industry. As vehicles become lighter, smarter, and greener, he sees more of that shift being shaped on the shop floor. He is focused on helping automotive customers get it right, with global technology proven on Indian shop floors, application know-how, and service close to home.



HARDIK PATEL

DIRECTOR OF ENGINEERING – INDIA PRODUCTION, MILACRON INDIA

Hardik Patel is Director of Engineering – Production at Milacron India, where he leads a 35-member Design & Validation engineering team. With more than 17 years of experience in the plastics and injection molding industry, he focuses on product innovation, machine development, validation, and manufacturing excellence. His work connects engineering decisions with customer value, reliability, cost competitiveness, and sustainable growth.

Hardik believes sustainable plastics will scale only when material innovation, recycling technology, and processing equipment advance together, delivering consistent quality at a commercially viable cost.



HEMAL BHAVSAR

ASSOCIATE DIRECTOR – PRODUCT MANAGEMENT, MILACRON INDIA

Hemal Bhavsar is Head – Product Management at Milacron India, where he leads the injection molding machine portfolio for India and international markets. With over 28 years at Milacron, he has progressed from machine testing through customer service, application engineering, and aftermarket to product leadership, building the company's service and application support function along the way.

Hemal believes a machine's true value is measured over years of production in the customer's plant. He focuses on building products informed by field experience, with reliable platforms, application support, and service that lasts the life of the machine.



DIVAKAR GOKHALE

HEAD OF MOBILITY - INDIA SUBCONTINENT AND HEAD OF BUSINESS DEVELOPMENT, INDIAN SUB-CONTINENT, COVESTRO INDIA

With over 32 years of experience in Engineering Plastics and Polymers, Divakar Gokhale has played a vital role in Application & Technology Development, Innovation, and Design Thinking across various sectors, including Automotive, Railways, Electrical & Electronics, and Renewable Energy. He holds a degree in Plastics Engineering, a Postgraduate Diploma in Computer Software, Systems Analysis & Applications, and a PG in Business Management specialising in International Marketing. Gokhale began his career at Bayer India as a Technical Sales Officer and has since taken on strategic roles in Sales & Marketing, application Development, Global Innovation, and Business Development, with over three decades at Bayer and Covestro. As a recognised thought leader, he has presented at numerous global conferences, including those organised by SIAM, AIPMA, ET Polymers, and the Driving Vision Network. In his free time, Gokhale enjoys dream analysis, Hindustani classical music, and photography.



SANTOSH RATHOD

COUNTRY HEAD & MANAGING DIRECTOR, TRINSEO INDIA

Senior business and P&L leader with 30+ years of experience across specialty materials, engineering polymers & automotive applications. Currently Country Head & Managing Director of Trinseo India, Santosh Rathod leads the India business, with responsibility for P&L, business strategy, and country business management. His career combines a deep technical understanding of polymers and processing with strong commercial and strategic leadership.

Earlier roles with Dow Chemical, Tyco/Raychem, Philips, and Tata Auto Plastics provided experience across application development, engineering, international business, and automotive programs. Santosh Rathod particularly enjoys building businesses where technology, customer value, and commercial execution come together, especially in specialty materials and automotive applications.



RAMESH VARADAN

MANAGING DIRECTOR, YIZUMI ADVANCED PROCESSING TECHNOLOGY PVT LTD

Mr. Ramesh Vardhan, Partner & MD of YIZUMI INDIA has 25 years of experience in various capacities in Indian Injection Molding Industry. Graduated in Mechanical Engineering from Madras University. He did his Post Graduation from CIPET, Guindy & added MBA later from Narsee Monjee Institute,Mumbai.

Mr. Ramesh began his career with a leading Autrian company as a Technical Support Engineer where he was trained arduously for two years. Within 13 years he rose to the position of Country Manager. He joined as CEO to an Italian company which was a successful Green Field Project.

In 2017, he started his joint venture with YIZUMI and has been at the helm of Yizumi India as a Partner and Managing Director. YIZUMI INDIA is situated at GIDC Industrial Park, Sanand, Ahmedabad, Gujarat having 80,000m^2 area with 20,000m^2 production facility,expanding to another 40,000m^2 facility and annual product capacity of 1000 sets of various product range tonnage from 60T to 4000T. We are proud to announce having 4500+ installation in India.



LIONEL VAZ

BUSINESS DIRECTOR - PLEXIGLAS MOLDING COMPOUNDS & ACRYLIC PRODUCTS
GENERAL MANAGER AT ROEHM CHEMICALS INDIA

Lionel Vaz holds a Bachelor's Degree in Polymer Engineering from the University of Pune and a Postgraduate qualification in Marketing Management from Mumbai. He brings over 30 years of extensive experience in the polymer industry, spanning Sales, Marketing and Application Development, with a significant focus on the automotive sector.

He joined Röhm in 2013 as Business Director, when the company was part of Evonik, and was responsible for the PLEXIGLAS® Polymers Business Line. In this role, he drove PMMA solutions across diverse applications, particularly in the Construction, Aviation and Automotive markets.

Throughout his career, Lionel has worked closely with the automotive industry, contributing to the development of new markets and applications for various polymeric materials.

Currently, he heads Röhm's India legal entity and plays an active role in driving the company's business growth across the Indian subcontinent.



JAI SANGHAVI

MANAGING DIRECTOR OF ITIB MACHINERY INDIA PVT.LTD.

Jai Sanghavi is the Managing Director of ITIB MACHINERY INDIA PVT.LTD., a Joint Venture with ITIB MACHINERY INTERNATIONAL Srl., Italy.

Jai Sanghavi is a BBA Graduate from Flame University, Pune with rich experience in Manufacturing, Supply Chain and Production Technique. He is entrusted with the task for developing new Products as well as New Processes.

He joined the Family Business in 2016 and has experience of over 10 years in the Pipe Extrusion Business.

He has taken extensive training at ITIB MACHINERY INTERNATIONAL SRL., ITALY to learn the need to provide good technology with aesthetic appeal to the products and above all he needs to offer a machine that is reliable, ensures continuous production and are economical as well. With this Key Process Matrix ITIB INDIA under his leadership has grown as a brand to reckon with They have been awarded 'The Brand of the Year Award' by ET Polymers for 2025.

He has a penchant for sports activities; he is an ardent football player and has a passion is to travel worldwide to gain more knowledge on different cultures and customs.



SACHIN KADAM

GBS DIRECTOR,
FAURECIA INTERIOR SYSTEMS BUSINESS GROUP

Sachin Kadam is an automotive industry professional with extensive experience across global programme management, business development, cost competitiveness and product engineering. His professional journey includes key roles at leading automotive organisations, including Tata AutoComp Systems and International Automotive Components (IAC Group), before joining Faurecia. During his tenure at Faurecia, he has been associated with global programme management and the development of cost competitiveness capabilities. His earlier responsibilities included establishing and leading a Global Centre of Excellence for Cost Competitiveness, building cross-functional teams and driving strategic cost optimisation initiatives. He has also managed international automotive programmes involving European OEMs, with responsibilities spanning project execution, engineering coordination and operational improvements. An engineering graduate in Polymer Engineering from the Maharashtra Institute of Technology, Pune, Sachin combines technical understanding with business and programme leadership experience, bringing a global perspective to automotive manufacturing and supplier operations.



SANDEEP CHAUDHARY

PRESIDENT - REGION INDIA & MANAGING DIRECTOR,
HUF INDIA PVT. LTD

Sandeep Chaudhary is the President, Region India, and Managing Director & Board Mem-ber of Huf India Pvt. Ltd. He joined Huf in April 2020 as Plant Director, Pune, and has since played a pivotal role in driving the company's growth, operational excellence, and strategic de-velopment in the Indian market.

Prior to joining Huf, Mr. Chaudhary served as Managing Director at BENTELER India. He brings with him more than two decades of extensive leadership experience across globally re-nowned automotive and industrial organizations, including Faurecia, Rinder, Mahle, SKF, and Bosch.

Mr. Chaudhary possesses a robust range of competencies, including Project Management, Production and Operations Management, Manufacturing Excellence, Facilities Management, Strategic Leadership, and Cross-Functional Team Development. His strong industry expertise, combined with a people-centric leadership approach, has enabled him to deliver sustainable business results and foster organizational growth in highly competitive environments.

Under his leadership, Huf India continues to strengthen its position as a trusted partner to the automotive industry, driving innovation, operational excellence, and customer-focused solutions.



Dr. UDAY NARANG

FOUNDER AND CHAIRMAN,
OMEGA SEIKI MOBILITY AND ANGLIAN OMEGA GROUP

Dr. Uday Narang is the Founder and Chairman of Omega Seiki Mobility and the Anglian Omega Group, and is widely regarded as one of India's leading champions of sustainable mobility and advanced manufacturing. After returning to India in 2015, he leveraged more than two decades of global experience in finance, management, and market leadership across the United States, Europe, and Asia to drive the rapid expansion of the Group's automotive, steel, infrastructure, and mobility businesses. A firm believer in collaborative leadership, Dr. Narang has transformed Anglian Omega into a diversified industrial powerhouse—spanning bright steel manufacturing, precision engineering, real estate development, packaging, sports technology, and clean mobility—while deepening the company's presence across Asian and ASEAN markets.

Under his visionary leadership, Omega Seiki Mobility (OSM), founded in 2018, has grown into one of India's most innovative clean-energy incubators and a pioneering force in the electric vehicle ecosystem. Motivated by concerns over air pollution and the rising operational burden on drivers due to high fuel prices, he set out to create a future-ready mobility enterprise grounded in sustainable, data-driven, and smart engineering. In just a few years, OSM has achieved numerous industry-first milestones, including launching India's first green hydrogen-powered three-wheeler, the world's fastest-charging passenger electric three-wheeler, the nation's first electric truck, and the first electric three-wheeler with a refrigerated cargo system. Dr. Narang also led OSM to become India's first fully backward-integrated EV OEM and expanded its global technological footprint through strategic partnerships with Honda Power Pack Energy, Jae Sung Tech, Sun Mobility, Exponent Energy, and others—strengthening India's EV supply chain and advancing next-generation battery innovation.



DR SANDEEP WAYKOLE

CEO & DIRECTOR, ACCOLADE ELECTRONICS PRIVATE LTD.

Dr. Sandeep Waykole is the Chief Executive Officer & Director at Accolade Electronics Private Limited, where he is steering the company's strategic growth in the automotive electronics space. In his current role, he leads initiatives focused on enhancing EDITA, strengthening long-term business sustainability, and establishing a robust financial framework that supports the company's strategic objectives. He is also driving the implementation of lean processes to boost operational efficiency and improve P&L performance, positioning Accolade Electronics for scalable, technology-driven expansion.

With over 26 years of diverse experience across automotive electronics, seating systems, and plastic interiors and exteriors, Dr. Waykole has previously led global businesses worth €200M during his leadership roles at Forvia (Faurecia), Magna Steyr, and Tata AutoComp Systems (TACO). A BE in Polymer Engineering, MBA, and PhD in Management, backed by his certification as a Sustainability Coach, further strengthens his ability to transform ideas into high-impact, sustainable business outcomes. He specializes in strategic growth, innovation, global partnerships, and operational excellence—making him a leading driver of transformation in the automotive industry.



SHWETA KULKARNI

AGM – MATERIALS EXPERTISE, ECODESIGN & SUSTAINABILITY, STELLANTIS INDIA

Shweta Kulkarni is an experienced automotive professional with over two decades of experience in materials expertise, polymers, eco-design and sustainability. She currently serves as Head – India & Asia Pacific, Materials Expertise, Eco-design and Sustainability at Stellantis, a position she has held since August 2026. Over the course of her career, she has worked with leading automotive brands, contributing to the development of more than 15 vehicles across six brands. Her expertise spans polymers, plastics, elastomers, colour, materials and finishes (CMF), lightweighting and sustainable material innovation. At Stellantis, she leads the PBS, CMF and Sustainability domains while representing the region in the global innovation function. She is also involved in global initiatives focused on achieving Carbon Net Zero through material substitution, eco-design and circular economy practices. Prior to Stellantis, she worked with Volkswagen India, the National Chemical Laboratory and Tata Auto Component. She holds a Bachelor's degree in Polymer Engineering.



MOHAN DK

GENERAL MANAGER-QUALITY, PD, IE ASSY AND AUTOMATION, TOYODA GOSEI SOUTH INDIA PVT LTD

Mohan D K is a seasoned automotive industry professional with 28 years of experience in quality management, process design and manufacturing operations. He currently serves as General Manager – Quality, Process Design & Automation at Toyoda Gosei South India Pvt. Ltd. Over the years, he has developed strong expertise in injection moulding, thermoplastics, automotive quality systems, process improvement and manufacturing automation. He has extensive knowledge of automotive core tools, including APQP, PPAP, FMEA, MSA and SPC, and is well-versed in IATF 16949 standards and Lean Six Sigma methodologies. A certified Lean Six Sigma Black Belt, he also holds certifications in quality auditing, process auditing and environmental management systems. He is actively involved in technical training and knowledge-sharing, particularly in injection moulding processes and automotive quality standards. He holds a Bachelor's degree in Mechanical Engineering from UVCE, Bangalore, and an MBA in Operations from ISBR, Bangalore.



ANIL GEORGE

CO-FOUNDER & MANAGING DIRECTOR, AUTODYNAMICS

Anil George is an automotive industry professional and entrepreneur with over three decades of experience in business leadership, product development and automotive engineering. He is the Co-founder and Managing Director of AutoDynamics, where he focuses on developing innovative, lightweight solutions for the automotive and allied industries, particularly through metal-to-plastic conversion and advanced composite technologies. Prior to establishing AutoDynamics, he held senior leadership positions at Magna Steyr India, where he served as Managing Director, and Tata AutoComp Systems, where he led the Export Unit and Technical Centre. Anil has been recognised for his contributions to automotive innovation, including receiving the Society of Plastics Engineers' Best Innovative Plastic Design Award. He has also contributed to multiple patents, presented technical papers at industry forums and participated in the Tata Group Innovation Forum. His work centres on advancing material innovation, lightweighting and product engineering.



Dr PRAFULLA SHINDE

REGIONAL SALES & NBD, ADTS LEADER, LYONDELLBASELL

Dr Prafulla Shinde is a senior business and commercial leader with over 19 years of experience in commercial leadership, Marketing and Business Development, with strong expertise in polymers, performance materials in the automotive & Industrial sector.

He is Doctorate in Business Administration (from SSBM Geneva) in Sustainability & Environment Management,

Completed his Executive Management from IIM Rohtak and graduated polymer engineering from MIT, Pune.

He is passionate about driving profitable growth, building strategic customer partnerships, developing new markets and creating sustainable business solutions.

His leadership philosophy centers on collaboration, innovation and developing high-performing teams.

Beyond work, Prafulla is avid golfer & founder of Polymer Golfers Association, reading and travelling the world, which fuel his curiosity, continuous learning and global perspective.



P.C. JAYAN

BU UNIT HEAD, TATA AUTOCOMP SYSTEMS LTD.

P.C. Jayan is an experienced automotive professional with over three decades of expertise in automotive interiors, product engineering and technology development. He has built a strong career in the automotive components industry, with a focus on engineering innovation, product development and manufacturing solutions. In September 2021, he was appointed Chief Technology Officer of Minda Corporation's Interior Plastic Division, where he was expected to strengthen the company's technology capabilities and expand its automotive interiors and lightweighting portfolio. His experience in the automotive sector includes an emphasis on developing solutions that address evolving OEM requirements and improve product performance. At Tata AutoComp Systems, he brings his industry experience to business unit leadership, contributing to the development of automotive component solutions and the evolving mobility ecosystem. His professional expertise spans automotive interior systems, plastics, engineering and technology-led product innovation.



GAJANAN BHOITE

PLATFORM PURCHASE HEAD – COMMERCIAL VEHICLE PLATFORM AT MAHINDRA & MAHINDRA LTD.

Gajanan Bhoite, Commodity Head – Trims & Elastomer, Electrical & Electronics (CDMM) in Mahindra Trucks & Bus with over 25 years of expertise in supplier and part development. With a distinguished career spanning collaborations with leading OEMs such as Mahindra & Mahindra, Renault, and Tata Motors, Gajanan has played a pivotal role in advancing supplier part development strategies and ensuring world-class quality standards.

Currently leading the development & procurement of trims & plastics, and E&E components for Mahindra Trucks and Bus Division (MTBD), Gajanan combines deep technical knowledge with strategic supplier management to deliver innovative, cost-efficient, and reliable solutions.

A certified Six Sigma Black Belt professional, Gajanan is recognized for driving process excellence, defect reduction, and continuous improvement initiatives across the automotive supply chain. Gajanan has consistently contributed to enhancing product quality, supplier performance, and organizational competitiveness.

With nearly 30 years of rich experience in the automotive industry, including leadership roles at Mahindra & Mahindra and Tata Motors, having extensive expertise in strategic sourcing, supplier development, commodity management and supply chain excellence.

A seasoned automotive professional known for industry knowledge and commitment to excellence.



RAJIV SANGHAVI

FOUNDER OF SATELLITE PLASTIC INDUSTRIES

Rajiv Sanghavi, founder of Satellite Plastic Industries offers machinery and technology for Plastic Pipes since 1984 as Indenting Agents for Machinery form Italy dedicated to the pipe industry. From indenting Agents, they moved to production of machinery in India in partnership with their principals. Satellite has 3 Joint Ventures with SICA Italy, Borghi Italy and ITIB Italy. Besides they represent Gnata, Friul Filiere and Sima as their sole agents for the Indian Subcontinent.

Leading Pipe producers of India, looking for good technology and supported by an equally good after sales service, satellite has become a favorite choice as machinery suppliers with regular orders from such Pipe Producers.

Rajiv Sanghavi is the Managing Director of ITIB India and we have been offering single wall and double wall corrugated Pipe production lines in India.

TRINSEO
Connecting ideas with solutions

Material Solutions for Mobility

Interior Parts
Exterior Parts
Semi-structural Parts
EV Battery Casings

Lightweighting
Advanced Performance
Recycled Content
Bio-attributed

Rigid Plastics
PULSE™ PC/ABS
MAGNUM™ ABS
ENLITE™ PP & ABS GF
ALTUGLAS™ PMMA

Soft Plastics
MEGOL™ TPE

Composite Materials

Global Presence. Local Support.

2,800 Employees
20 Manufacturing Sites
11 R&D Facilities
4 Recycling Operations (Including pilot plants)

As of 2025

For more information, please visit our website:

Download our automotive brochure:

www.trinseo.com

MILACRON

PRESENTING PARTNER

Milacron (www.milacron.com) is a global industrial leader in the manufacturing and distribution of highly engineered and customized injection molding and extrusion solutions, and aftermarket parts and service for the plastics processing market. The company's 1,900 associates worldwide collaborate to serve a diverse range of end-markets, such as automotive, construction, medical, telecommunications, material handling, packaging, and much more. Molding and shaping its expertise in plastics for nearly 60 years, Milacron holds longstanding relationships with more than 27,000 customers around the world. The original equipment provider of plastics manufacturing solutions is the largest US-owned and globally served of its kind. Headquartered in Batavia, OH/USA, Milacron's global footprint is also serviced through regional offices in Asia, Europe, and South America. Milacron is an operating company of Bain Capital.

COVESTRO (INDIA) PVT. LTD.

PLATINUM PARTNER

Covestro is one of the world's leading manufacturers of high-quality polymer materials and their components. With its innovative products, processes and methods, the company helps enhance sustainability and the quality of life in many areas. Covestro supplies customers around the world in key industries such as mobility, building and living, as well as the electrical and electronics sector. In addition, polymers from Covestro are also used in sectors such as sports and leisure, telecommunications and health, as well as in the chemical industry itself.

The company is geared completely to the circular economy. In addition, Covestro aims to achieve climate neutrality for its Scope 1 and Scope 2 emissions by 2035, and the Group's Scope 3 emissions are also set to be climate neutral by 2050. Covestro generated sales of EUR 12.9 billion in fiscal year 2025. At the end of 2025, the company had 46 production sites worldwide and employed approximately 17,600 people (calculated as full-time equivalents).

YIZUMI INDIA

GOLD PARTNER

YIZUMI INDIA, located in the GIDC Industrial Park, Sanand (Ahmedabad, Gujarat), operates on an expansive 80,000 m^2 facility with an annual production capacity of 1,000 sets of various products across a wide tonnage range from 60T to 4000T. With 2100+ installations across India, YIZUMI has established a strong and trusted presence in the market. YIZUMI is not only a world-class molding equipment manufacturer but also a leading turnkey solution provider for molding equipment. By gathering global wisdom, we combine multiple professional capabilities and develop new ideas. To better satisfy various marketing demands, we try hard to promote technological progress and achieve diversified product coverage and global operation. We are committed to providing more advanced molding equipment system solutions with a better return on investment for global customers and strive to develop ourself into a world-class and respectable enterprise leading in scale and influence.

TRINSEO

GOLD PARTNER

Trinseo is a global specialty materials solutions provider delivering innovative, high-performance materials across automotive and mobility, building and construction, consumer, and industrial applications. Combining polymer science, application expertise, and customer collaboration, Trinseo focuses on developing sustainable material solutions that support lightweighting, electrification, and circularity. Trinseo automotive solutions are running across global OEMs including India. Trinseo automotive materials are well known for performance consistency & differentiation.

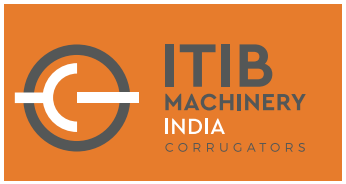

ITIB INDIA

SILVER PARTNER

At ITIB India, we're dedicated to revolutionizing the corrugated pipe machinery industry. With over five decades of experience, we are your premier source for innovative solutions in in corrugator machines and advanced Corrugated Pipe Production Line systems.

With a rich history spanning more than 50 years, ITIB Machinery International has consistently delivered cutting-edge extrusion lines for the production of Single and Double Wall Corrugated Pipes. We specialize in working with a wide range of thermoplastic materials, including PE, PP, PVC, PA, EVA, and more. We offer a range of machines to produce SWP from 4.5mm ID upto DWP pipes of 800 OD

At ITIB India explore our diverse product range, including Single Wall Corrugators capable of handling pipes from 4.5mm I.D. up to 65mm O.D., and Double Wall Corrugators designed for pipes ranging from 40mm O.D. up to 75mm O.D.

At ITIB India, quality is our commitment. Our machinery is built to last, ensuring precision, durability, and efficiency. We adhere to international standards, making us a trusted choice for businesses across various industries.

Experience the difference with ITIB India. Our dedication to innovation and customer satisfaction sets us apart. Join hands with us to shape the future of the corrugated pipe industry.

PLEXIGLAS®
THE ORIGINAL BY RÖHM

RÖHM

SILVER PARTNER

Röhm is a leading supplier of methacrylate chemicals worldwide. Thanks to our positioning as a global company with 15 production sites on four continents, Röhm is close to our customers and markets. As one of the world's leading partners in quality and reliability, we are committed to defining the methacrylate markets of tomorrow together with our customers. Our strategic goal is clear—to become the leading Methacrylate Verbund.

Our global presence makes us a reliable partner for our customers. For us, limitless partnership means developing the right solutions together with our customers and making their successes our own.

The structure of an integrated production network gives us the flexibility we need to respond quickly and dependably whenever circumstances in our industrial markets and at our customers change.

For this we build on decades of experience in the field of methacrylate chemistry. At the same time, we are further expanding our technology-based strengths in the integrated production network and are continuously developing new fields of application with our products. Our Brands are PLEXIGLAS® ACRYLITE® CYROLITE® DEGALAN® DEGAROUTE® MERACRYLTM

Our Business Unit Molding Compounds offers a complete range of PMMA-based standard, impact-modified and special molding compounds.

PLEXIGLAS® molding compounds show convincing performance in all applications where the foremost requirements are unexcelled weather resistance, colorfastness, high brilliance and transparency as well as hardness and abrasion resistance. In cooperation with specialists from the plastics industry and their suppliers we develop new PLEXIGLAS® products for innovative applications. This joint development work leads to complete, production-stage solutions for end users.

HOT SOLUTION

YUDO

HOT RUNNER SYSTEM

YUDO HOT RUNNER INDIA PVT. LTD.

SUPPORTING PARTNER

YUDO specialises in hot runner systems, which are the core components of molds, and manufactures all essential parts internally, including nozzles, manifolds, mold bases, heaters, etc.

The core values of this vision can be summarized as 'Customer focus,' 'Cutting-edge technology' 'realising customers' dreams,' and 'company culture respected by customers.'

The company invites one to anticipate YUDO's future endeavors, whose entire business philosophy is focused on the customer. In India, the company has a history of over 21 years and is the most widely reached and preferred hot runner brand by customers. The company operates with a swift business structure offering a total solution, including the fastest door delivery, transactions in the local currency, quickest application, design, and after-sales service support.

YUDO India's approach emphasises that sustainability can drive innovation by introducing new design constraints that shape the versatility of the product to achieve the desired result. With a history spanning over four decades, the company has not only sustained its growth trajectory but has also become the largest and most versatile hot runner system manufacturer in the world. This commitment constantly drives us toward innovation in our product portfolio. Recent examples include ISO Manifold Technology, Tina AM Screwed-in leak-proof system, CPVC HRS Systems, Servo control, T multilayer systems, etc.

Under the Make in India program, the company is strongly committed. Vital spare parts that used to take days to come from overseas are now being manufactured in India.



AUTOMOTIVE SERVICE PROVIDERS ACADEMY (ASPA)

ASSOCIATE PARTNER

The Automotive Service Providers Academy (ASPA) is a professional network dedicated to strengthening and professionalising India's automotive aftermarket ecosystem. It brings together independent workshops, dealers, suppliers, manufacturers, trainers and other industry stakeholders on a common platform to promote skill development, business excellence and road safety.

ASPA focuses on empowering automotive service providers through six key pillars: management skilling, mentoring and coaching, networking and collaboration, events and seminars, rewards and recognition, and road safety campaigns. Its initiatives equip workshop owners and managers with the knowledge, tools and professional practices required to improve operational efficiency, customer experience and business growth.

Founded by Vikrantt Mohan, ASPA aims to build a trusted network for automotive service providers while connecting workshops with OEMs, component manufacturers and technology providers. With a vision to expand beyond India, the organisation seeks to raise service standards and foster a more organised, skilled and collaborative automotive aftermarket industry.

YUDO
Leading innovation

Yudo Worlds largest Hot Runner Manufacturer provide feed system solutions for injection mold making your products .....

- More convenient
- Stronger
- More beautiful
- Maximum customization
- More safe
- Lighter
- More diverse
- Eco friendly

Tina AM

Pre-assembled & Pre-wired system for Automotive application

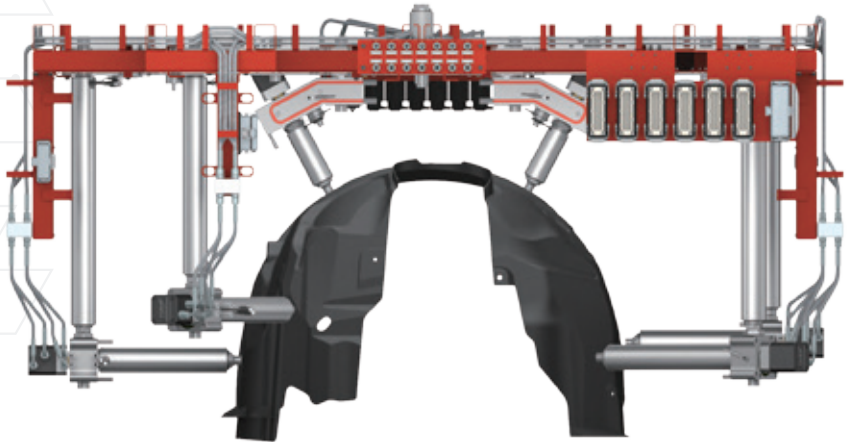

Yudo has an optimized Hot Runner System for each segment product in various industries ranging from Automotive, EV, Electronics, Electrical, Mobile, Precision engineering, Packaging , PET perform, Pipes Fittings etc.

Engineering Plastics
Glass Fiber 60%



Tina EP

Medical
Micro Tip Fine Pitch



Tina SG

Packaging
More Output Space Saving



Tina MC

Home Appliances
Durability with High Aesthetics



Tina GP

Great Place To Work. Certified

YUDO Hot Runner India Pvt. Ltd.

Mumbai(HO), Pune, Chennai, Delhi, Ahmedabad, Bengaluru, Coimbatore, Ananthapuram

sales@yudo.co.in | +91 7666390458 | www.yudo.com

MILACRON®

Presents

ET NOW POLYMERS 10th EDITION Global Conference on Plastics in Automotive

Platinum Partner

covestro

Gold Partners

YIZUMI | HPM

TRINSEO™

Silver Partners

ITIB MACHINERY INDIA

PLEXIGLAS® THE ORIGINAL BY RÖHM

Supporting Partner

HOT SOLUTION YUDO HOT RUNNER SYSTEM

Association Partner

ASPA

Media Partners

ET NOW POLYMERS | ET NOW

Conceptualised and Executed by

WWM Worldwide Media Pvt. Ltd. | THE TIMES GROUP